Product Data Sheet

JXQ quadrant profile

Part No: **JXQ-PROFILE**

- 90 Degree quadrant profile
- Fits 10mm wide LED tape
- Opal diffuser available
- Fixing clips available
- End caps available
- Available in 2.5m lengths

Leyton Lighting, Unit 4 Hemmells Park, Hemmells, Laindon, Essex, SS15 6ED
Tel: 01268 544 488 Email: sales@leyton-lighting.co.uk Web: www.leyton-lighting.co.uk

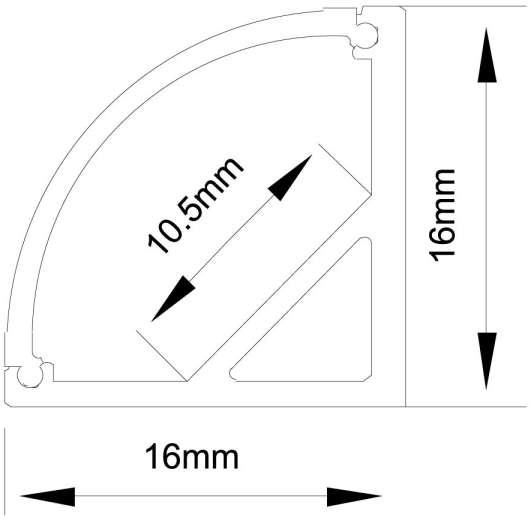

Technical Specification

Part No	**JXQ-PROFILE**
Finish	Aluminium
Width	16
Internal Width	10.5

Leyton Lighting, Unit 4 Hemmells Park, Hemmells, Laindon, Essex, SS15 6ED
Tel: 01268 544 488 Email: sales@leyton-lighting.co.uk Web: www.leyton-lighting.co.uk

Depth	16
Material / Made From	Metal
Unit of sale	2.5
Price	per meter

Leyton Lighting, Unit 4 Hemmells Park, Hemmells, Laindon, Essex, SS15 6ED
Tel: 01268 544 488 Email: sales@leyton-lighting.co.uk Web: www.leyton-lighting.co.uk